■ Part Number・Features

●TAP-1T-※※-※※

Coil voltage

IInsulation Resistance
-11 : Insulation Resistance > 10^{11} Ω
-12 : Insulation Resistance > 10^{12} Ω
(Except coil to shield)

● Low power consumption type , drivable by TTL level voltage

■ Performance

Specifications	Item	Standard
Contact Specifications	Contact Form	1c(Transfer)
	Contact Rating	3W
	Max. Switching Voltage	DC.30V
	Max. Switching Current	0.1A
	Max. Curry Current	0.5A
	Contact Resistance	150mΩ MAX.(Initial)
Electrical Specifications	Breakdown Voltage	Open Contact DC.200V, Contact to Coil DC.1000V (1min)
	Insulation Resistance	1×10^{10} ΩMIN.(DC.100V)
	Capacitance	Open contact 2.5pF TYP.
	Thermal Electromotive Force	30μV TYP.
	Operate Time	Including bounce 1.5mS MAX.(Nominal Voltage)
	Release Time	Including bounce 2.0mS MAX.(Nominal Voltage)
Mechanical Specifications	Vibration	20G(0～2kHz, 1.5mm)
	Shock	30G(11mS, 1/2 sine wave)
Envirnment	Operating Temperture	-10℃～+60℃
Life Expectancy	Mechnical	5×10^{7} Operations MIN.
	Electrical	DC.10mV-10μA 5×10^{7} Operations MIN.(Resistance Load)
		Please contact us for life data.

■ Coil specifications

Part Number	Nominal Voltage DC±10% [V]	Coil Resistance ±10% [Ω] at20℃	Nominal Current [mA]	Must Operate Voltage MAX. [V] at 20℃
TAP-1T-12	12	3000	4.0	8.5
TAP-1T-05	5	650	7.7	3.8

■ Dimensions・Terminal Identification (Unit : mm)

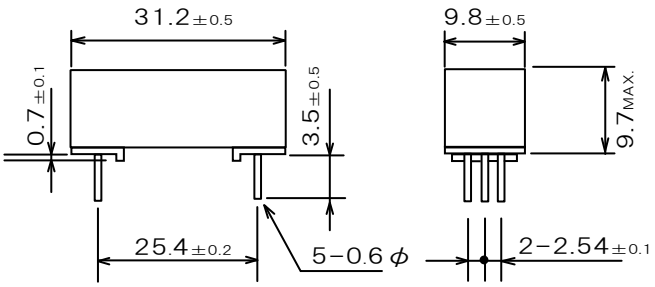

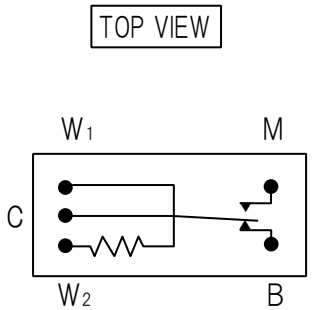

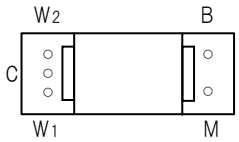

BOTTOM VIEW

Weight approximately 7gr.